Office Parks & MTUs

WITH THE REVENUE EXTRACTION GATEWAY

rgNets

In the dynamic digital landscape of today, office complexes and Multiple Tenant Units (MTUs) demand advanced, secure networking solutions tailored to each tenant's unique requirements. The rXg addresses these challenges with a powerful and versatile solution ideal for multi-tenant installations. Combining B-RAS, B/OSS, and NMS/EMS, the rXg delivers exceptional connectivity, security, and customization capabilities for office complexes and MTUs.

KEY FEATURES:

• Powerful Broadband Remote Access Server (B-RAS) with BNG, cg-NAT, and BiNAT features for sophisticated enterprise networking

• Integrated, multi-tenant, and microsegmentation-aware Network Access Control (NAC) for secure sharing of physical infrastructure

• Flexible GUI for personalized user experiences for tenants and property owners

• Comprehensive Network Management System/Element Management System (NMS/EMS) for automated management of southbound equipment

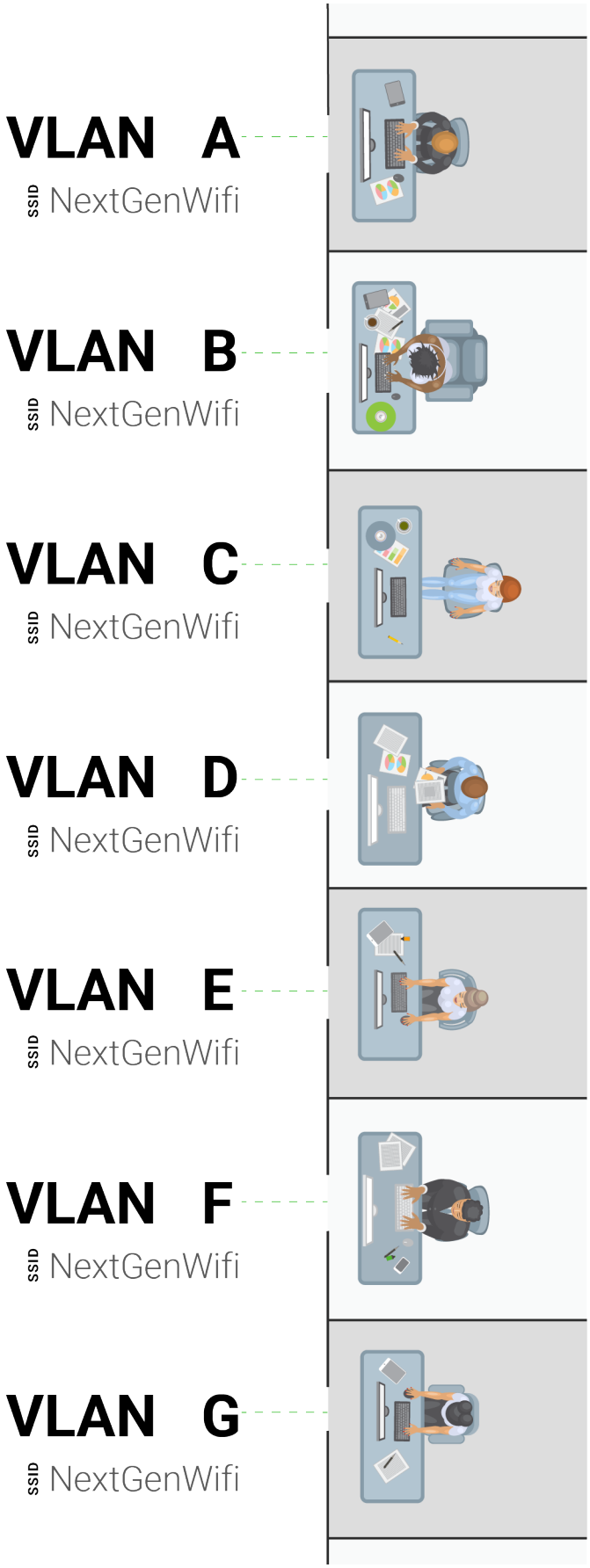

Advanced B-RAS for Enterprise Networking in Office Complexes and MTUs

Delivering Reliable Connectivity in Multi-Tenant Environments

The rXg features a cutting-edge Broadband Remote Access Server (B-RAS) that provides exceptional enterprise networking capabilities for office complexes and Multiple Tenant Units (MTUs). The B-RAS is specifically designed for multi-tenant environments with high demand for enterprise networking. Boasting powerful Broadband Network Gateway (BNG), Carrier-Grade Network Address Translation (cg-NAT), and Bi-directional NAT (BiNAT) features, the rXg ensures dependable and secure connectivity for every tenant within the complex.

Integrated NAC, Customizable GUI, and NMS/EMS for Enhanced Security and Customization

A TAILOR-MADE NETWORKING SOLUTION FOR OFFICE COMPLEXES AND MTUs

The rXg offers an integrated, multi-tenant, and microsegmentation-aware Network Access Control (NAC) enabling multiple subscribers to securely share the same physical infrastructure while maintaining full Layer 2 separation. This guarantees secure and efficient networking for all tenants within the office complex or MTU. The rXg's adaptable and customizable GUI empowers operators to create bespoke user experiences for tenants and property owners, delivering a personalized solution that accommodates the distinctive needs of each tenant within the complex.

Moreover, the integrated Network Management System/ Element Management System (NMS/EMS) ensures smooth management of all southbound equipment, granting operators peace of mind with a well-maintained and secure network.

The rXg is the ultimate networking solution for office complexes and Multiple Tenant Units (MTUs), offering unrivaled connectivity, security, and customization capabilities. Its state-of-the-art B-RAS, integrated NAC, customizable GUI, and comprehensive NMS/EMS guarantee that each tenant's unique requirements are met while maintaining a secure and efficient network infrastructure. Don't leave your multi-tenant networking needs to chance – trust the rXg to deliver a dependable and secure solution.

www.rgnets.com
sales@rgnets.com
316 CALIFORNIA AVE
RENO, NV 89509